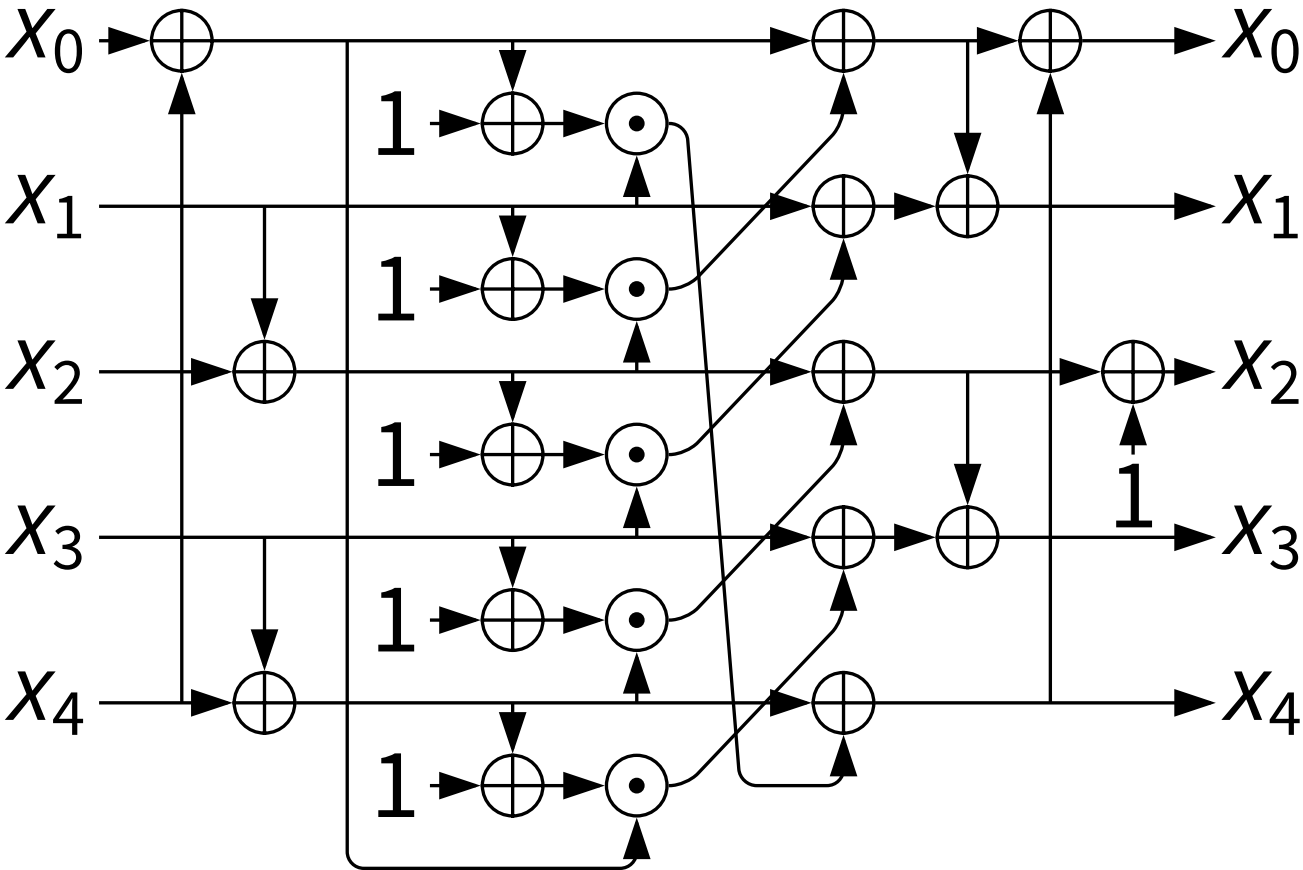
x_0
x_1
x_2
x_3
x_4
1
1
1
1
1
1
x_0
x_1
x_2
x_3
x_4